13”-42” TV / Monitor

SERIE: **UNIVERSAL WALL MOUNT**

UK1280	**UK740401**	**6974560221080**
MODEL	PART NUMBER	EAN

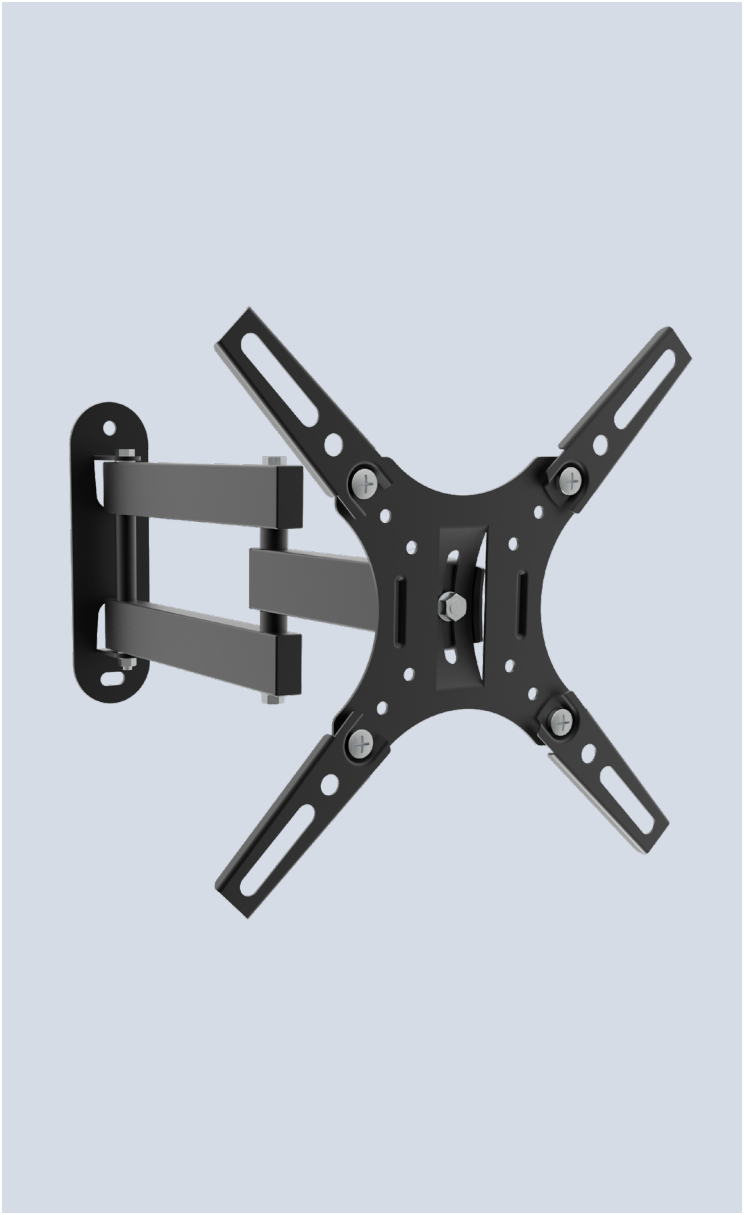

Description

•Support for monitors / TVs up to 20 kg, made of high-strength steel and painted with electrostatic paint for a perfect finish.
•Maximum VESA: 200 x 200 mm (compatible with VESA 75 x 75, 100 x 100, 200 x 100, 200 x 200 mm).
•Tilt angle: ﹢10~ -10°, swivel angle: -90º / 90º (depends on the installation and available space).
•Wall distance: adjustable between 40 and 360 mm.
•Multi-language instruction manual.

Scheme

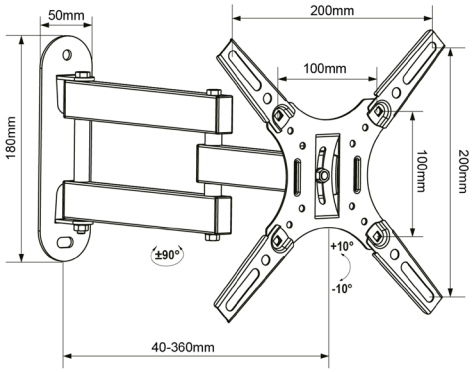

Gallery

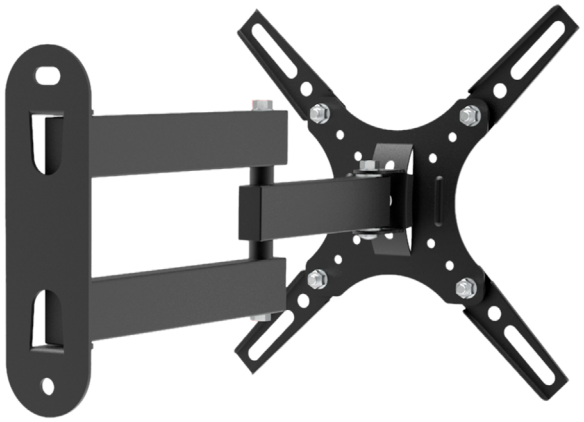

READ

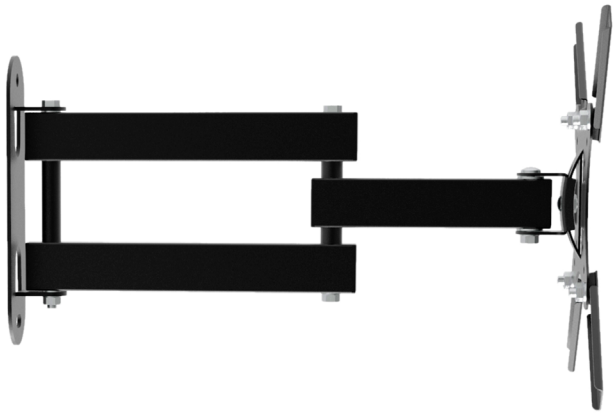

LATERAL

TECHNICAL SPECIFICATIONS | WALL MOUNT UK1116

SCREEN SIZE	13" - 42"
WEIGHT	0.85 kg
MATERIAL	Steel
MAXIMUM LOAD WEIGHT	20 kg (44lbs)
DISTANCE FROM WALL	40 - 360 mm
SWIVEL	+ 10 ~ -10°
ROTATION	±90°
VESA	200 x 200 mm

PACKAGING

DIMENSIONS	232 x 185 x 42 mm
WEIGHT	1,005 kg
CUBIC CAPACITY	0,00180 m^3
COLOUR	Brown
MATERIAL	Cardboard
PACKAGE CONTENT	Monitor Stand / Screws
CERTIFICATIONS	CE / ROSH

CARTON

UNIDADES CARTÓN	10 PCS
DIMENSIONS	38.5 x 22.5 x25 cm
WEIGHT	N.W:10 kg / G.W:10.6 kg

*All specifications and features, as well as color and software versions, may be subject to change by manufacturer.
*Product availability may vary by market. Check with your provider for promotions and special offers.
*All trademarks are registered in accordance with the law.